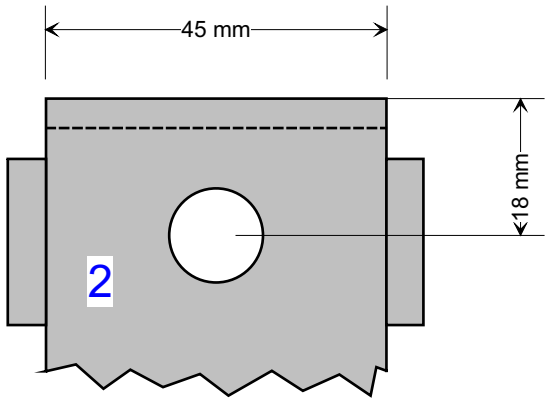
45 mm
18 mm
2

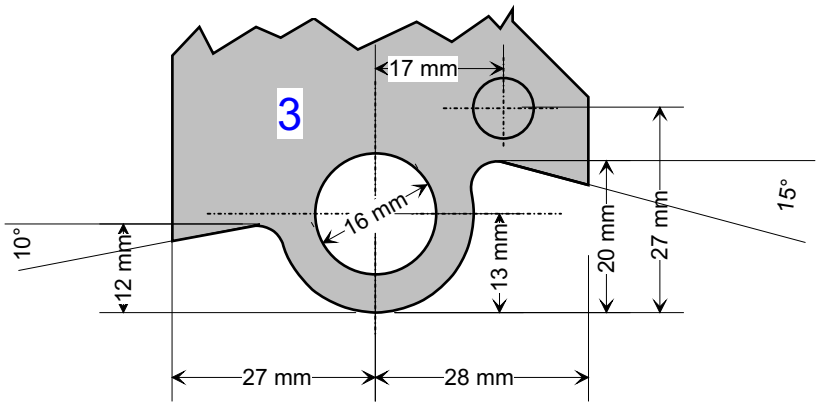
3
17 mm
16 mm
10°
12 mm
13 mm
20 mm
27 mm
15°
27 mm
28 mm

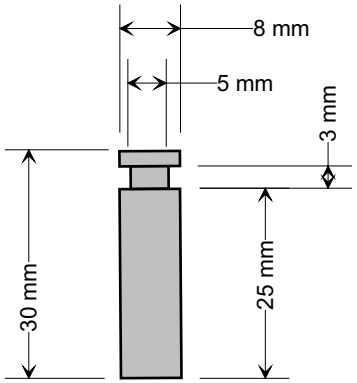
8 mm
5 mm
3 mm
30 mm
25 mm

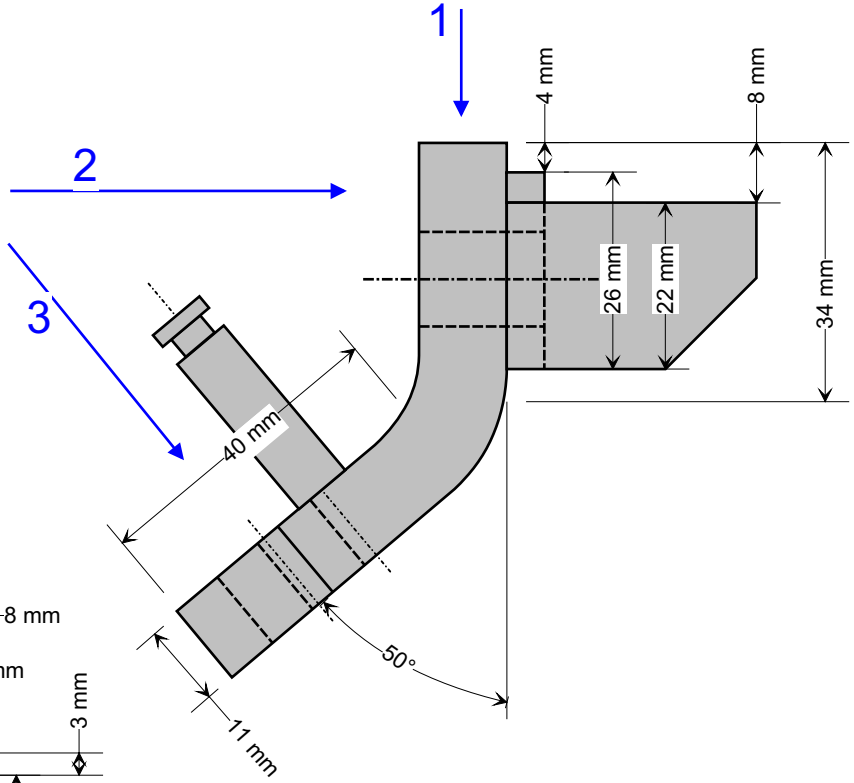
1
2
3
4 mm
8 mm
26 mm
22 mm
34 mm
40 mm
50°
11 mm

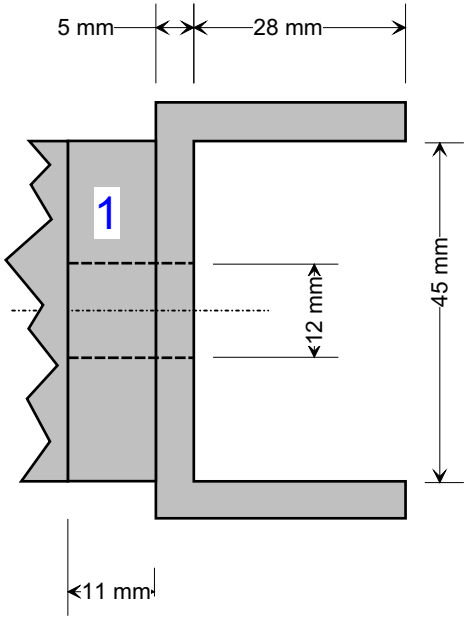
5 mm
28 mm
1
12 mm
45 mm
11 mm